MHPE 500

ULTRA-PRECISE SURFACE AND FORM GRINDING MACHINE

MACHINES
TRIPET
made by LKS

The MHPE 500 is a Top Grade machine!

Thanks to its modern practical design, its rigid construction, based upon years of experience in this field, this machine is the IDEAL CHOICE for the customer seeking the highest accuracy, fine surface finish and high productivity.

Its adaptability makes it suitable also for criss-cross Surface Grinding, Profile Grinding of steel or carbide plus form grinding from solid using the Creep Feed feature.

Grinding Area	500 x 200 mm (20" x 8")
Table surface	600 x 200 mm (23,6" x 8")
Max. distance table to spindle centre line	412 mm (16,2")

Flatness achieved over whole table area 500 x 200 mm (20" x 8")	2 microns (.00008")
Squareness of column ways to table surface	3 microns (.00012")
Max. breakdown at edge of ground workpiece	0.3 microns (.000012")

MACHINES
TRIPET
made by LKS

Specification, Standard Machine

With standard equipment, the machine is supplied ready for use.

MACHINE BASE completely enclosed with built-in hydraulic and electrical equipment.
Electrical & hydraulic control panel.

TABLE & SADDLE
Fully hydraulic, variable feeds up to 25 m/min. (82 ft/min.) with criss-cross grinding feature.

- Creep feed, variable from 0.5 mm (.02") to 8 m/min. (26 ft/min.).

Contactless trips and proximity switches for slide reversal.

- Leadscrew for manual cross feed.

VERTICAL COLUMN AND WHEEL HEAD
Precision grinding spindle with 3 kW drive motor (4 kW optional), power lubrication unit.

- Automatic wheel downfeed by stepping motor adjustable from 0–99 microns per pass (0–.004") with zero stop. Pulse button for down feed in steps of one micron (.00004").
- Micrometer down feed by hand.

Rapid vertical traverse by power.

- Hydraulic wheel dresser on wheelhead with 0.6 ct diamond.
- Diaform adaptor plate.

AUTOMATIC CENTRALISED LUBRICATION of slide ways.

HYDRAULIC POWER PACK floor mounted including electrical control cabinet.

- COOLANT SYSTEM

For some simple grinding operations some of the machine elements (marked ●) can be omitted at time of construction.

These elements should only by omitted after careful study of users requirements, as it is not usually possible to retrofit them at a later date.

Grinding Spindle

Special attention has been given to the design of the grinding spindle as it is one of the most important elements on which good results largely depend.

We have sought to achieve the following conditions:
Perfect grinding results
Good reliability
Long service life.

We believe that our spindle design meets these requirements.

The heavy spindle 100 mm dia. x 300 mm long (4" dia. x 12" long) runs in a tapered bronze bearing at the front end with pressure lubrication.

The rear end runs in high precision ball bearings, with oil bath lubrication, these relieve the spindle of belt tension. Spindle nose is tapered to accept the wheel mounts which are hardened, ground and fitted with 3 balancing weights.

A Grinding spindle 100 mm dia. x 300 mm long (4" x 12")

B Wheel mount with taper bore and 3 balance weights, wheel size 250 x 30 x 76,2 mm (9,8" x 1,1" x 3")

C Extractor for wheel mount

D Balancing arbor

E Lubricating oil tank with pump and filter unit.

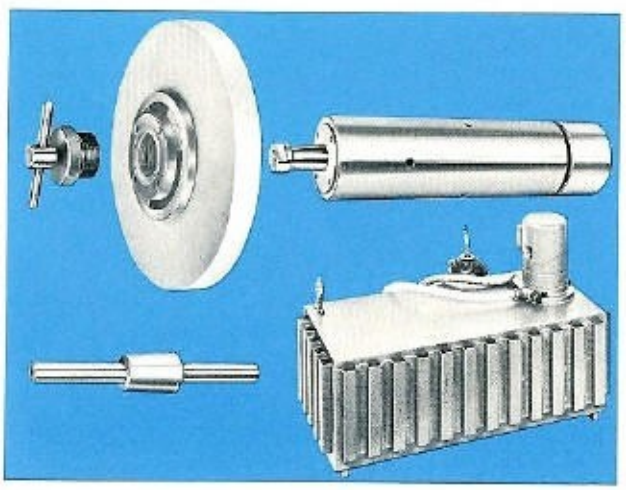

Drive to Grinding Spindle

A 3 kW (4 kW optional) dynamically balanced motor is mounted on a bracket at the base of the vertical slide with 40 mm adjustment for correct belt tension A flat belt is used for vibration free drive.

A safety interlock device prevents the spindle from starting unless the lubricating pump is in operation.

Rapid Traverse to Wheelhead

The head can be traversed over a distance of 290 mm at a speed of 460 mm/min., this is appreciated by the operator when grinding at different levels.

The wheel can be withdrawn quickly from the job to minimise accidents.

Automatic Down Feed

The down feed movement is controlled by a new solid state I.C. system driving through a stepping motor. Down feed increments, at each reversal of table or saddle, can be dialled in from 0-99 microns (0-.004"). The feed automatically stops when zero position is reached.

A pulse button provides down feed in steps of 1 micron (.00004").

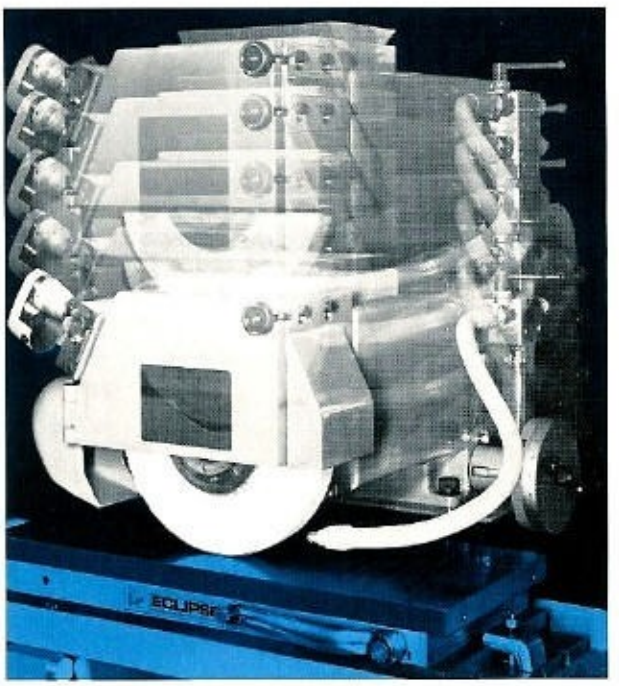

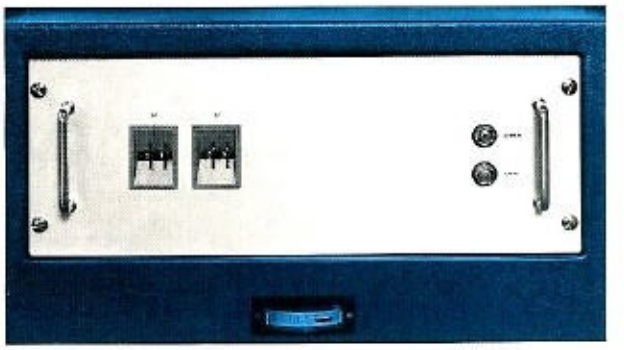

Micrometer Wheel Feed

Facilitates final wheel approach to the workpiece as well as fine adjustment in increments of 0.001 mm (or 0.0001"). It enables the wheel to be reset after dressing without altering the position of the main down feed dial.

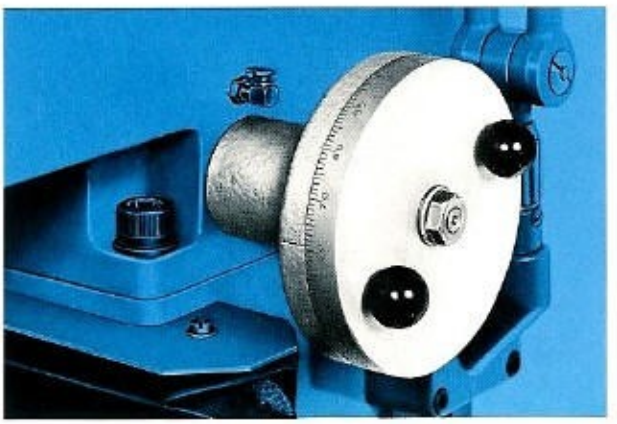

Manual Cross Traverse

For side grinding operations or for slots and profiles the hydraulic cross feed can be disengaged by turning a lever. This engages the cross screw and nut but also connects the wheel down feed to the table reversal (when using hydraulic cross traverse the down feed is related to saddle reversal).

To rapidly locate the cross screw nut in relation to the slide a dial is fitted in the centre of the handwheel, this indicates the position of the nut relative to the cross slide to within 1 mm. It is therefore possible at any time to centre the nut and ensure the required travel for a specific task.

Max. manual cross travel is 175 mm (6.88") handwheel has graduations of 0.01 mm (or .00025").

An optional fine adjustment device is available reading down to 0.001 mm (or .000025") see details on p. 10.

Hydraulic Wheel Dresser

The rigid slide with diamond holder is mounted on the side of the wheel head. Hydraulic feed is variable from 0-6 m/min. (0-20 ft/min.). To dress the wheel the operator has only to push a button.

The 0.6 ct diamond is inclined to the wheel axis to ensure longer life, the smooth hydraulic traverse ensures better surface finishes.

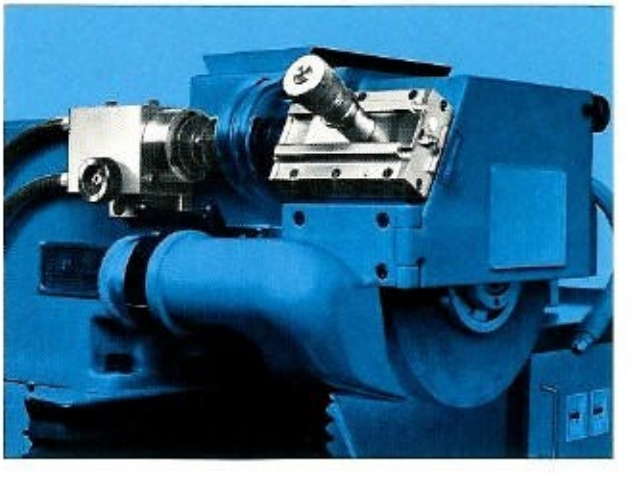

Creep speed control for grinding from the solid

Because of the special hydraulic control and above all due to the design of our cylinders (no cups or seal rings) the creep feed rate can be effectively controlled from 8 metres/min. (26 ft/min.) down to as low as 0.5 mm/min. (0.2" per min.).

The variable flow pump ensures full power at any selected feed rate, the creep feed control has a zero position at which the speed returns to that selected on the main control panel.

Use of Creep Feed for form grinding offers economies in wheel wear which cannot be equalled by any other technique. It also offers increased production and better surface finish.

Accessories for Creep Grinding

- Pre-selection and interlocking of creep feed control lever (see page 11)
- 4 kW wheel drive (see page 11)
- Hydraulic saddle clamp (see page 10)

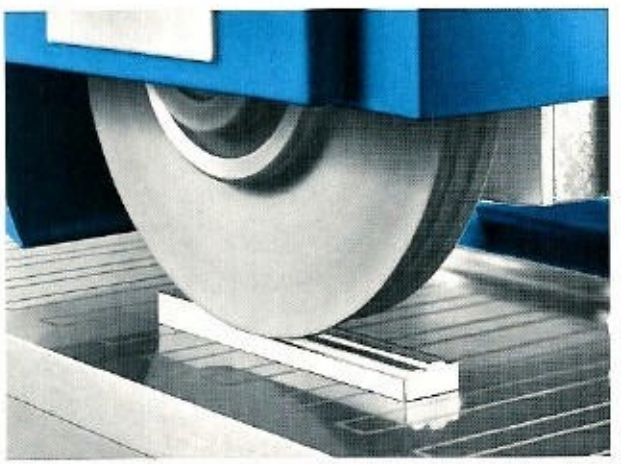

Automatic Central Lubrication

The machine is provided with automatic centralised lubrication for the table, saddle & column ways as well as for the vertical and cross leadscrews.

All the time the machine is working, the system delivers oil at regular intervals.

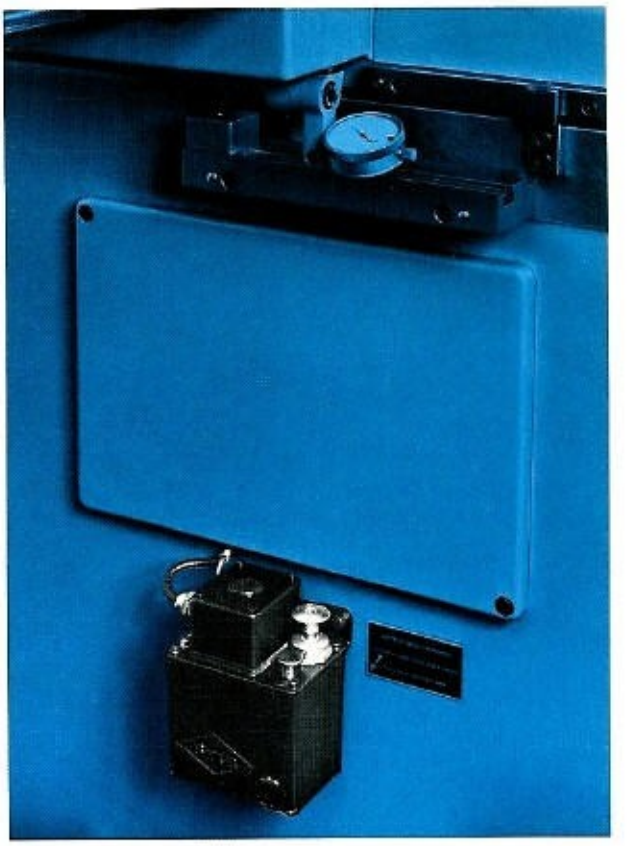

Electronic Digital Read-Out to control linear movement of cross slide (Vis-II-Q)

This includes an incremental measuring scale mounted in a rigid housing sealed against dust and coolant. The bi-directional counter reading to 0.001 mm (.00005") is connected by flexible cable to the display unit normally mounted on top of the electrical cabinet where it is easy visable to the operator.

This unit provides accurate positioning control the leadscrew being used for positioning movement only.

The digital read-out has many advantages but is especially useful for the rapid and accurate positioning of multiple slots and forms.

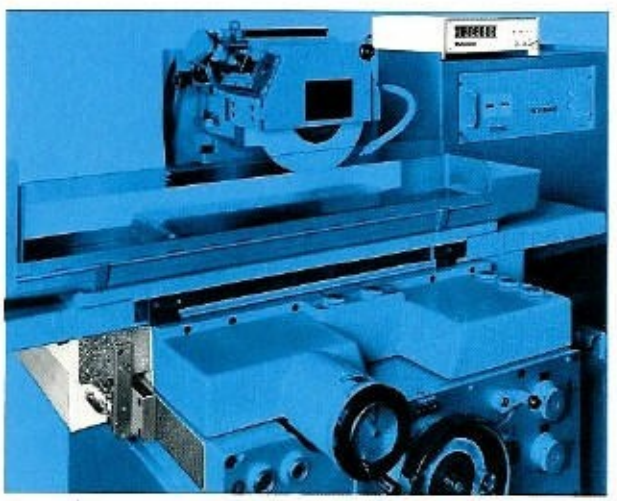

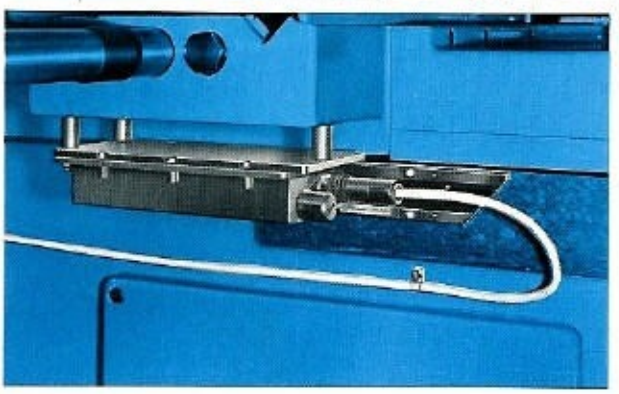

Electronic Digital Read-Out on vertical slide (Vis-II-V)

This is the same as the unit for the cross slide but in this case controls the vertical slide travel.

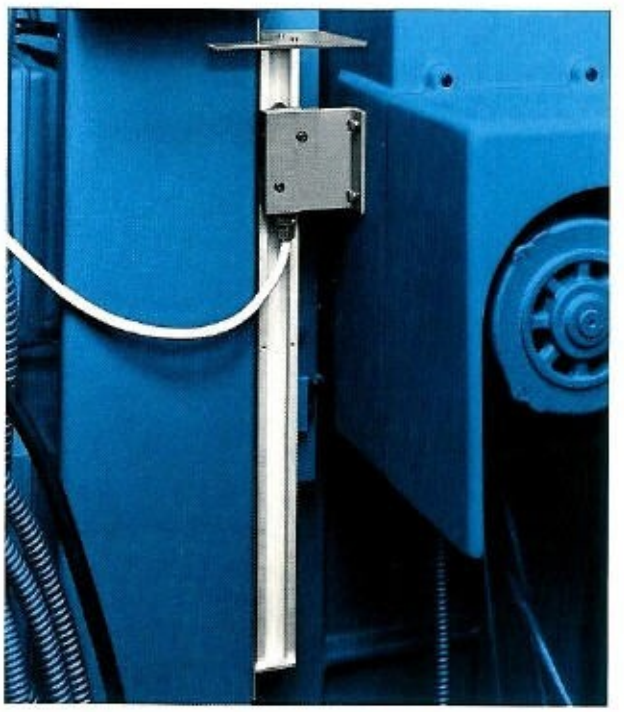

The digital read-out devices develop even further the capabilities of the MHPE 500 Ultra-Precise Surface and Form Grinding Machine attaining standards of performance and efficiency not previously possible.

Hand traverse to table (530)

A hand wheel provides manual table operation, useful for short table strokes etc. When the hand wheel is engaged a safety interlock cuts out the normal hydraulic movements.

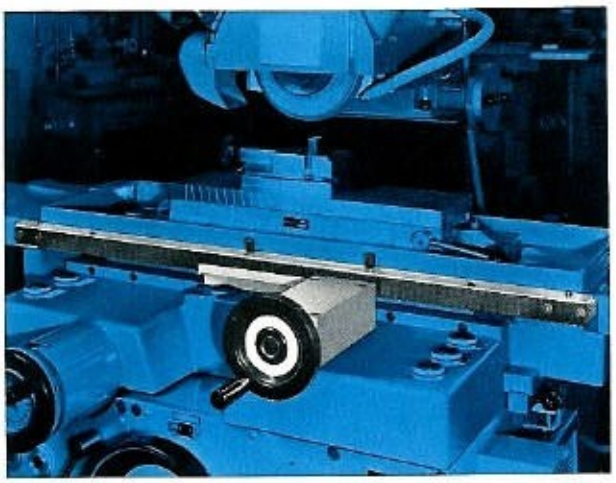

Hydraulic saddle clamp (140)

Used in conjunction with the manual positioning of the cross slide it is possible to hydraulically clamp the table in the required position.

The 'clamp' – 'unclamp'
controls comprise two push buttons connected to two hydraulic valves. This device locks the saddle firmly in position to prevent movement under load.

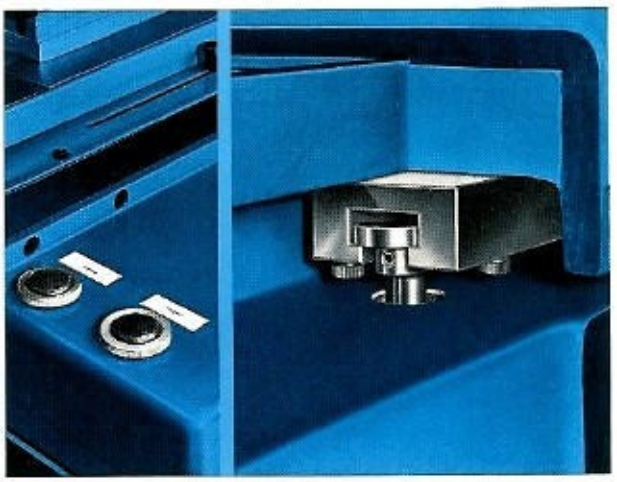

Micrometer adjustment for cross slide (1200)

The micrometer screw with graduated scale is fitted adjacent to the cross slide hand wheel. This feature provides a sensitive and precise saddle movement for close tolerance grinding.

Jump Feed on Cross Slide

For certain high production work, especially on carbides, the machine can be equipped with hydraulic jump feed on the cross movement variable from 0-10 mm (0 to .4") per table reversal.

Variable speed control for 4 kW wheel drive motor (800/4)

With this system the grinding wheel speed can be adjusted to suit the material being ground, such as alloy steels, tungsten carbide etc. As the peripheral speed must remain constant we have provided a device with automatic speed compensation after dressing the wheel.

This uses a static frequency convertor and a standard A.C. induction motor. The static frequency convertor has the following advantages: –

No mechanical wear
No mains supply surge
Full load torque on starting without surge in the mains supply.
Motor speed less dependent on the load.

Spindle speed is variable from 1150 to 3300 r.p.m. (Surface speed 15–30 metres/second), motor power of 4.0 kW remains constant.

An ammeter on the front of the electrical cabinet indicates the motor load.

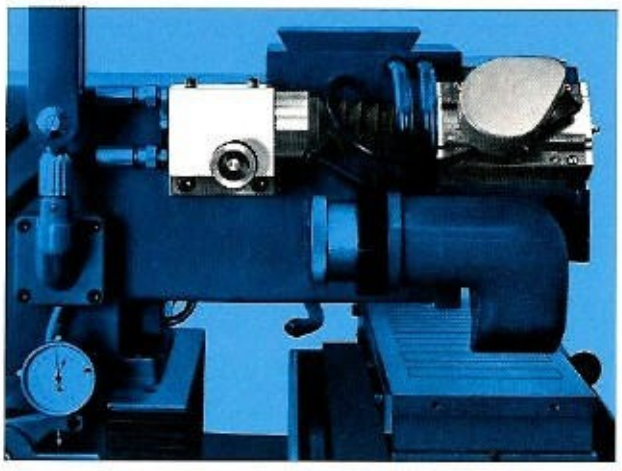

Pre-Selection of Table Creep Feed Rate (102)

This unique control enables a creep feed setting to be exactly duplicated after loading a new workpiece.

The lever is locked in the pre-set position during grinding, thus preventing any accidental change of feed rate.

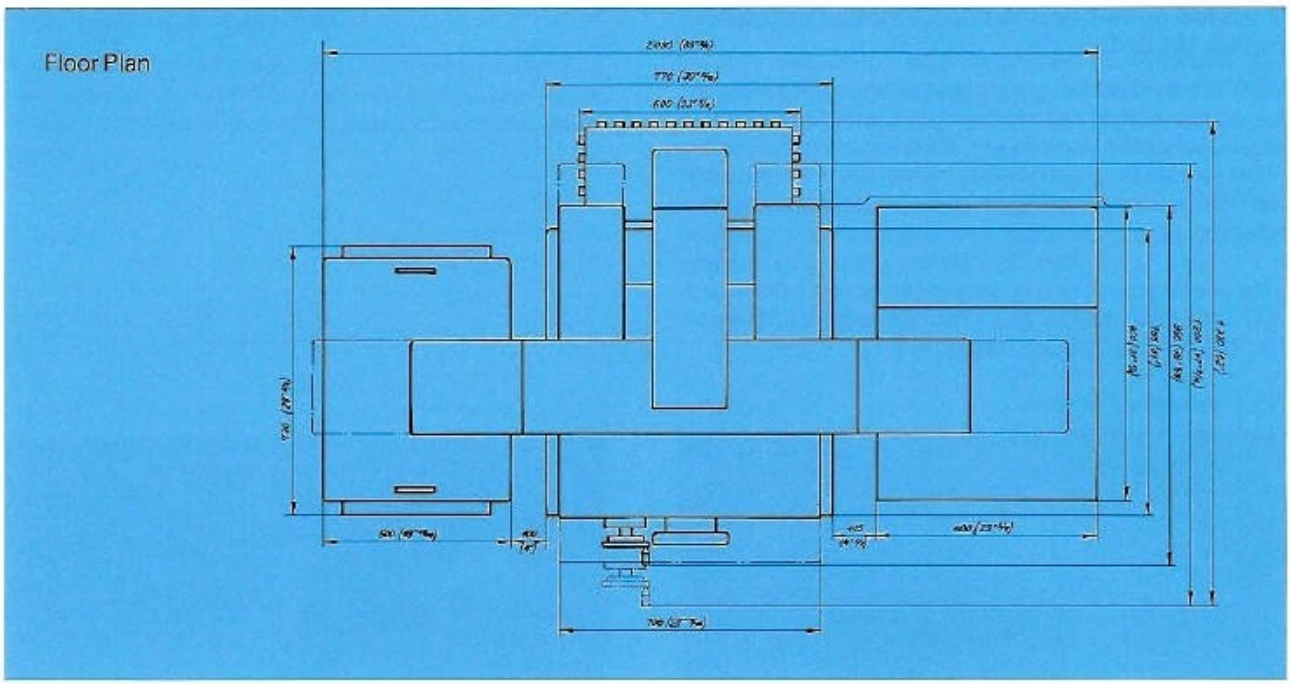

Technical Data

Max. slide movements		530 x 220 mm (20.8" x 8.7")
Max. grindling area		500 x 200 mm (19.7" x 7.9")
Table working surface		600 x 200 mm (23.6" x 7.9")
Table speeds, variable		0-25 m/min. (0-82 ft/min.)
with creep feed control		0.5 mm/min. - 8 m/min. (.02" - 26 ft/min.)
cross slide, variable		0-6 m/min. (0-20 ft/min.)
Vertical movement, manual		330 mm (13")
rapid traverse, by motor		290 mm (11.5")
at speed of		460 mm/min. (18 ins/min.)
Max. distance between table and spindle center		412 mm (16.2")
Vertical feed movement		
by handwheel	1 division	0.01 mm (or .0005")
with micrometer adjustment	1 division	0.001 mm (or .0001")
automatic down feed		0.001 mm - 0.099 mm (or .00004" - .004")
single pulse by push button		0.001 mm (0.00004")

Transverse feed movement		
by handwheel	1 division	0.01 mm (or .00025")
with micrometer device	1 division	0.001 mm (or .000025")
Grinding wheel		
Dia. x witdh x bore		250 x 30 x 76,2 mm (9,8" x 1,1" x 3")
Normal speed		2700 r.p.m.
Variable speed drive		1150 to 3300 r.p.m.
		Surface speed 15-30 metres/sec.
Motors		
Grinding wheel	3,0 kW (4,0 HP)	3000 r.p.m.
alternatively up to	4,0 kW (5,0 HP)	3000 r.p.m.
Hydraulic pump	1,0 kW (1,5 HP)	1400 r.p.m.
Coolant pump	0,1 kW (0,15 HP)	1500 r.p.m.
Vertical slide	0,18 kW (0,25 HP)	670 r.p.m.
Weight of machine		
Net approx.		1350 kg (2970 lbs)
Gross approx.		1600 kg (3520 lbs)
Case dimensions		(length x breath x height)
Machine		215 x 160 x 190 cm (85" x 63" x 75")
Electro-hydraulic cabinet		125 x 85 x 175 cm (49" x 34" x 69")

We reserve the right to make changes in construction and specification.

LKS Grinding GmbH
Oppligerstrasse 18
P.O. Box 98
CH-2500 Biel-Bienne 6
Switzerland
Phone +41 32 41 90 70
Fax +41 32 41 96 76

Represented by:

ISELI PRECISION INC.
1405 MEGHAN AVENUE
ALGONQUIN, IL 60102
PH. 847-516-1110 www.iseliprecision.com
FAX: 847-658-1615 grinders@iseliprecision.com